DIRECT ACTING PRESSURE RELIEF VALVES - IN-LINE MOUNTING

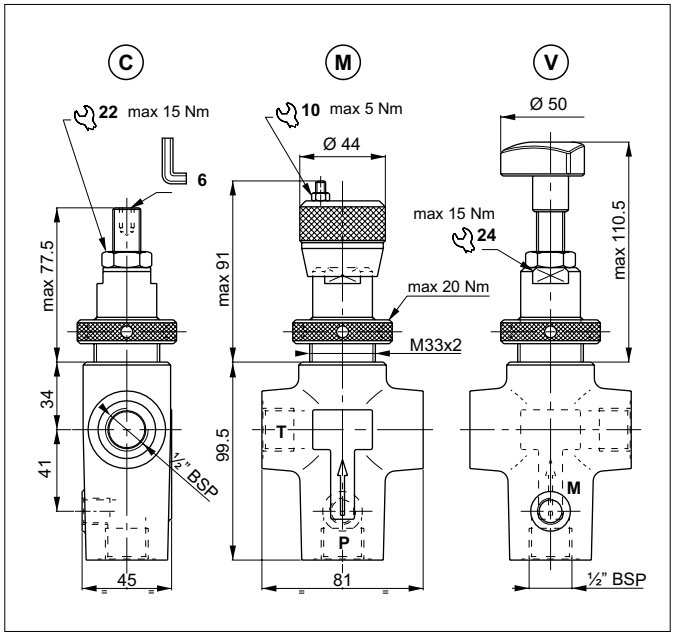

The direct acting relief valve with CMP20 cartridge limits the pressure in the hydraulic circuit to the calibration field specified in the catalogue.
It has a manganese phosphate coated cast iron body. The cartridge is in galvanised steel.

HYDRAULIC FEATURES

Max. working pressure	250 bar
Setting range: Spring 1 (white) Spring 2 (yellow) Spring 3 (green)	 max 30 bar max 140 bar max 250 bar
Max. Flow	80 l/min
Hydraulic fluid	DIN 51524 Mineral oils
Fluid viscosity	10 ÷ 500 mm²/s
Fluid temperature	-25°C ÷ 75°C
Ambient temperature	-25°C ÷ 60°C
Max. contamin. level class with filter	ISO 4406:1999 - class 19/17/14
Weight	1.7 kg

The minimum permissible setting pressure depending on the spring: see curves.

HYDRAULIC SYMBOL

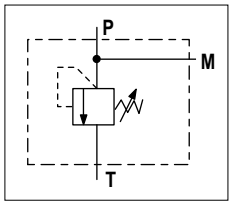

PRESSURE-FLOW RATE

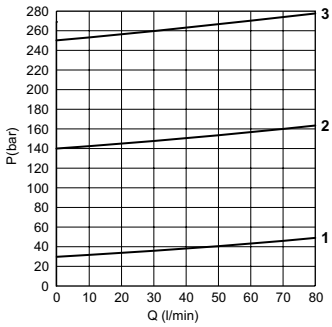

MIN.SETTING PRESSURE

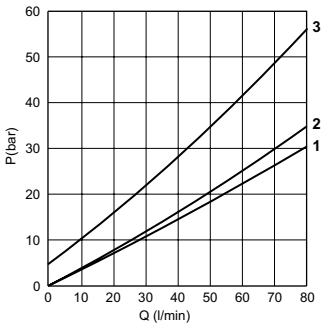

1 = VMP20.1.. - **2** = VMP20.2.. - **3** = VMP20.3..
Fluid used: mineral based oil with viscosity 46 mm²/s at 40°C.

ORDERING CODE

VMP	20	*	*	**	2

- Series: **VMP** = Pressure relief valve
- Size: **20** = Connector size: 1/2" BSP
- Adjustment: **C** = Screw; **M** = Steel knob; **V** = Handwheel
- Setting ranges: **1** = Max 30 bar (white spring); **2** = Max 140 bar (yellow spring); **3** = Max 250 bar (green spring)
- Variants: **00** = No variants; **V1** = Viton
- **2** = Serial No.