INLET MODULE UNITS WITH PRESSURE RELIEF VALVE

Module units FE10 with CMP10 adjustable pressure relief valve.

- Manual adjustment with a grub screw or plastic knob.
- Threaded ports P-T sizes G3/8" or 9/16"-18UNF.
- Maximum flow 40 l/min.
- Aluminum body.

FEATURES

Max. operating pressure	250 bar
Max. Flow	40 l/min
Hydraulic fluid	DIN 51524 Mineral oils
Fluid viscosity	10 ÷ 500 mm²/s
Fluid temperature	-25°C ÷ 75°C
Ambient temperature	-25°C ÷ 60°C
Max. contamination level (filter $ß_{25} \geq 75$)	ISO 4406:1999: class 21/19/16 NAS 1638: class 10
Weight	0.6 kg

Pressure relief valve (CMP10...)	
Setting range (*):	
Spring 1	max 50 bar
Spring 2	max 150 bar
Spring 3	max 320 bar

(*) The minimum permissible setting pressure depending on the spring: see curves.

HYDRAULIC SYMBOL

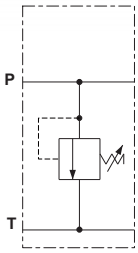

ORDERING CODE

FE10	Inlet module unit (up to 40 l/min) with pressure relief valve
3	Size
*	Port sizes: **1** = G3/8" **2** = 9/16"-18UNF
*	Adjustment: **M** = Plastic knob **C** = Grub screw
*	Setting ranges **1** = max. 50 bar (white spring) **2** = max. 150 bar (yellow spring) **3** = max. 320 bar** (green spring)
**	**00** = No variant **V1** = Viton
2	Serial No.

(**) Setting referred to the maximum pressure reached from the relief valve. **Do not exceed the maximum working pressure 250 bar.**

PRESSURE-FLOW RATE

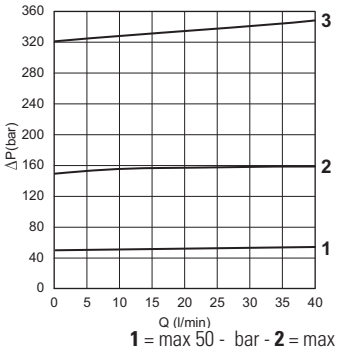

MIN.SETTING PRESSURE

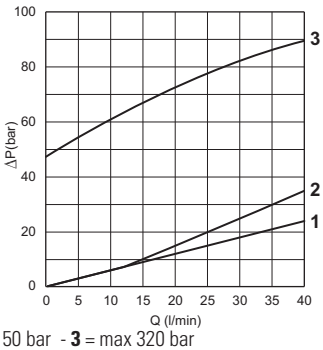

1 = max 50 - bar - **2** = max 150 bar - **3** = max 320 bar

Fluid used: mineral based oil with viscosity 46 mm²/s at 40°C.
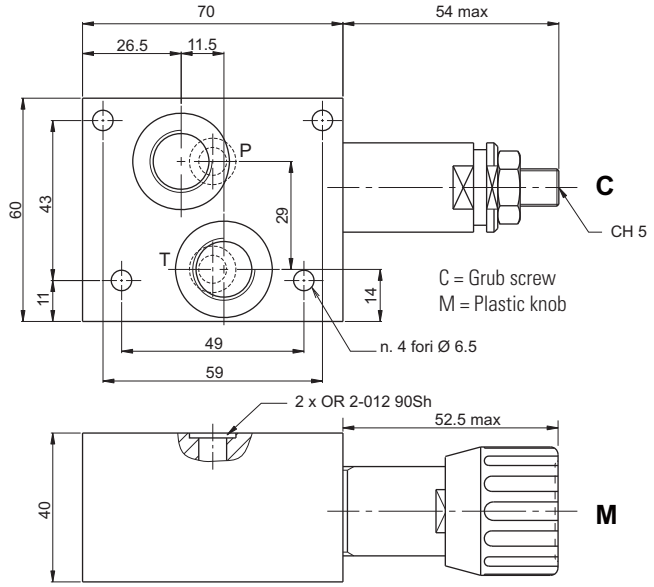
OVERALL DIMENSIONS