BDL06.6...	
"40W" DC Coils	Ch. I page 74
Standard connectors	Ch. I page 20

BDL066... FLOW DIVERSION VALVES

brevini

The 6 way flow diversion valves, type BDL.06.6, are special solenoid valves which allow the simultaneous connection of two systems. With all user ports on the same side, these valves allow to simplify the layout of hydraulic plant. As they are moved from high performances solenoids they don't need the external drainage.
This valves can manage high hydraulic powers with a low pressure drop.

Max. pressure	250 bar
Max. flow	50 l/min
Overlap	negative
Hydraulic fluids	Mineral oils DIN 51524
Fluid viscosity	10 ÷ 500 mm²/s
Fluid temperature	-25°C ÷ 75°C
Ambient temperature	-25°C ÷ 60°C
Max. contamination level	class 10 in accordance with NAS 1638 with filter $\beta_{25} \geq 75$
Weight	3 Kg

Ordering code

BDL	Flow diversion valves
06	Size NG06
6	No. of way
W	Threaded connectors 3/8"BSP
I	Internal drainage
*	Voltage (Tab. 1)
**	Variants (Tab. 2)
1	Serial No.

Tab.1 - 40W Coil

DC Voltage	
L	12V
M	24V
N	48V*
W	Without DC coils

Voltage codes are not stamped on the plate, their are readable on the coils.

* Special voltage

Tab.2 - Variants

No variant (without connectors)	S1(*)
Viton	SV(*)
Emergency button	ES(*)
Rotary emergency button	P2(*)
Deutsch DT04-2P Coil type	CZ

Other variants available on request.

(*) Coils with Hirschmann connection supplied without connectors. The connectors can be ordered separately, Ch. I page 20.

Hydraulic symbol

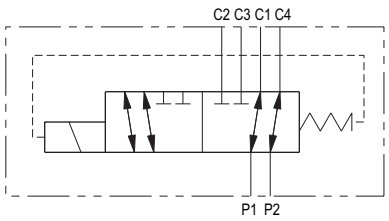

Pressure drops

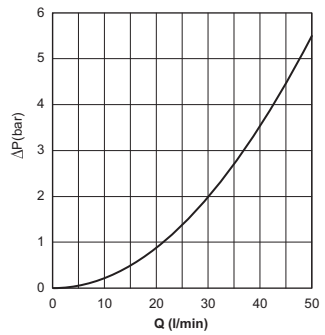

P1 → C1 , P1 → C2
P2 → C4 , P2 → C3

The fluid used is a mineral oil with a viscosity of 46 mm²/s at 40°C; the tests have been carried out at a fluid temperature of 40°C.

Overall dimensions

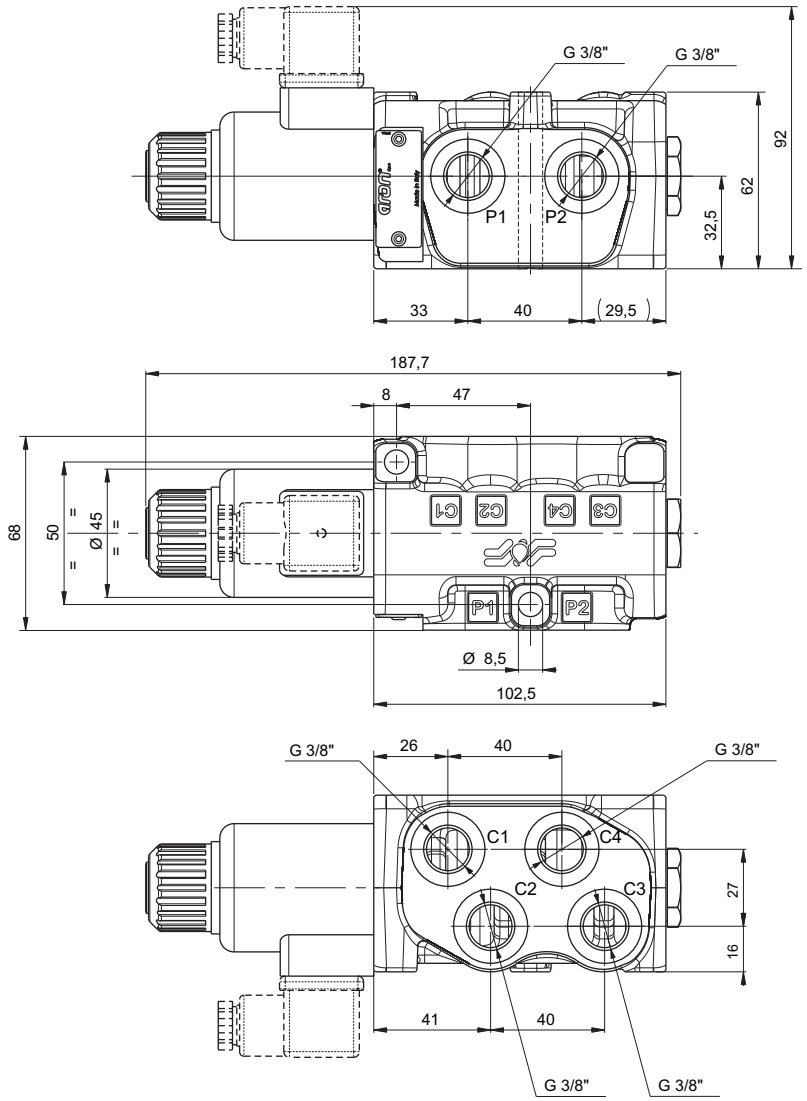

Fixing screws UNI 5931 M8x70 with strength class DIN 8.8.
Tightening torque 8 Nm / 0.8 Kgm