## SEQUENCE VALVES - DIRECTLY OPERATED (FOR MK3 SERIES POWER PACKS)



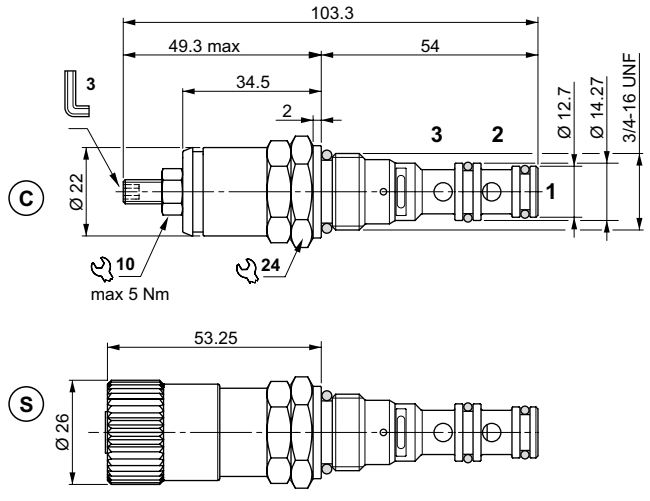


| | |
|---|---|
| **00012012** | Spare seals kit |

3 way direct acting sequence valve feeds with 1 → 2 flow, a secondary branch of a circuit when a set pressure value is reached.
While the port 3 is normaly connected to tank. When the port 1 is at a lower pressure than the setting pressure, the ports 2 and 3 are connected to tank.
Back pressure on port 3 adds to the valve setting.
Back pressure on port 2 does not effect the valve setting when there is flow from port 1 to 2. It raises the safety level by making it impossible for the plant operators to set a higher pressure rating, than that specified in the catalogue.
It has a pack spring with a mechanical stop (only standard screw and nut).
The body is made of steel with nitrocarburizing treatment while the spool is made of tempered and ground steel.

### HYDRAULIC FEATURES

| | |
|---|---|
| Max. pressure | 210 bar |
| Setting range:<br>Spring 1 (neutral)<br>Spring 2 (yellow) | <br>max 125 bar<br>max 160 bar |
| Max. Flow | 10 l/min |
| Leakage at 70% of the spring calibration (flow 1 l/min)<br>Spring 1: 0 ÷ 30 drops/min<br>Spring 2: 0 ÷ 60 drops/min | <br>Spring 1: 0 ÷ 1.5 $cm^3$/min<br>Spring 2: 0 ÷ 3 $cm^3$/min |
| Hydraulic fluid | DIN 51524 Mineral oils |
| Fluid viscosity | 10 ÷ 500 $mm^2$/s |
| Fluid temperature | -25°C ÷ 75°C |
| Ambient temperature | -25°C ÷ 60°C |
| Max. contamin. level class with filter | ISO 4406:1999 - class 19/17/14 |
| Weight | CSMK04C.. : 0.145 kg<br>CSMK04S.. : 0.152 kg |
| Tightening torque | 25 ÷ 30 Nm |
| Cavity (3/4 - 16 UNF) | CD018001 (See section 17) |

The minimum permissible setting pressure depending on the spring: see curves.

### HYDRAULIC SYMBOL

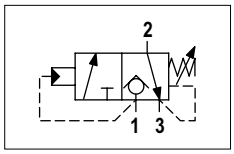


### PRESSURE-FLOW RATE (1 → 2)

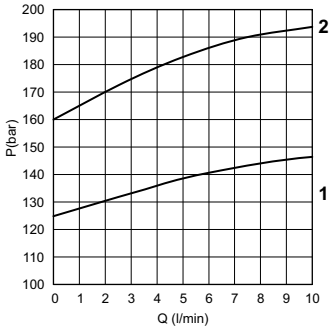


### MIN.SETTING PRESSURE (1 → 2)

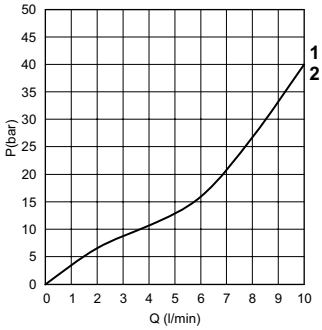


### PRESSURE DROPS (2 → 3)

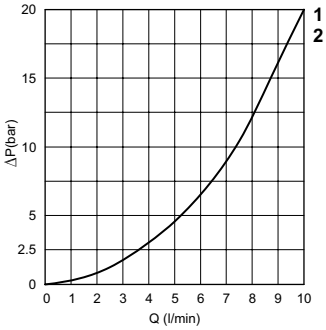


**1** = CSMK04.1..
**2** = CSMK04.2..

Fluid used: mineral based oil with viscosity 46 $mm^2$/s at 40°C.

### ORDERING CODE

| CSMK | 04 | * | * | 00 | 1 |
|---|---|---|---|---|---|

- Series: **CSMK** = Sequence valve
- Size: **04** = 3/4 - 16 UNF
- Adjustment: **C** = Screw; **S** = **C** +Removable cap lock
- Setting ranges: **1** = max 125 bar (neutral spring); **2** = max 160 bar (yellow spring)
- Variants: **00** = No variants
- **1** = Serial No.