INLET MODULE UNITS WITH PRESSURE RELIEF VALVE (UP TO 20 L/MIN)

Module units FE02 with CMP-MC/MS adjustable pressure relief valve

- Manual adjustment with a grub screw.
- Fhreaded ports (P and T) sizes G3/8" or 9/16""-18UNF.
- Maximum flow 20 l/min.
- Aluminum body.

FEATURES

Max. operating pressure	250 bar
Max. Flow	20 l/min
Hydraulic fluid	DIN 51524 Mineral oils
Fluid viscosity	10 ÷ 500 mm²/s
Fluid temperature	-25°C ÷ 75°C
Ambient temperature	-25°C ÷ 60°C
Max. contamination level (filter $ß_{25} \geq 75$)	ISO 4406:1999: class 21/19/16 NAS 1638: class 10
Weight	0.42 kg

Pressure relief valve (CMP-MC/MS	
Setting range (*):	
Spring 1	max 50 bar
Spring 2	max 90 bar
Spring 3	max 190 bar
Spring 4	max 290 bar

(*) The minimum permissible setting pressure depending on the spring: see curves.

HYDRAULIC SYMBOL

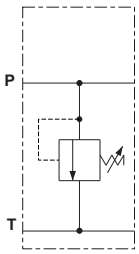

ORDERING CODE

FE02	Inlet module unit (up to 20 l/min) with pressure relief valve
3	Size
*	Port sizes: **1** = G3/8" **2** = 9/16"-18UNF
C	Adjustment: **C** = Grub screw
*	Setting ranges **1** = 0 ÷ 50 bar (white spring) **2** = 35 ÷ 90 bar (green spring) **3** = 75 ÷ 190 bar (yellow spring) **4** = 160 ÷ 290 bar ** (red spring)
**	**00** = No variant **V1** = Viton
3	Serial No.

(**) Setting referred to the maximum pressure reached from the relief valve. **Do not exceed the maximum working pressure 250 bar.**

PRESSURE-FLOW RATE

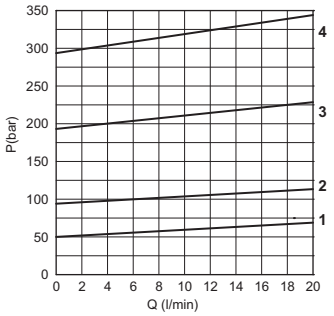

MIN.SETTING PRESSURE

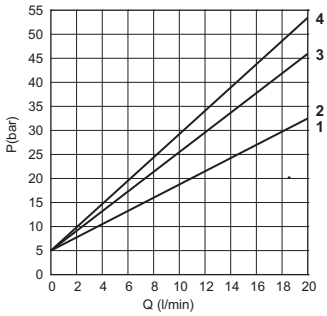

1 = 0÷50 bar - 2 = 35÷90 bar - 3 = 75÷190 bar - 4 = 160÷290 bar
Fluid used: mineral based oil with viscosity 46 mm²/s at 40°C.
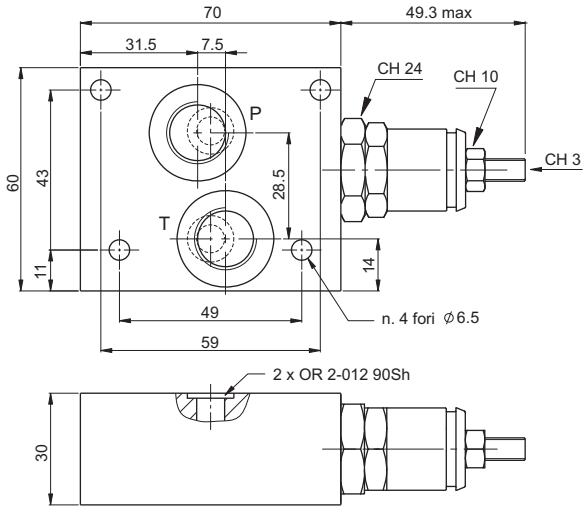
OVERALL DIMENSIONS